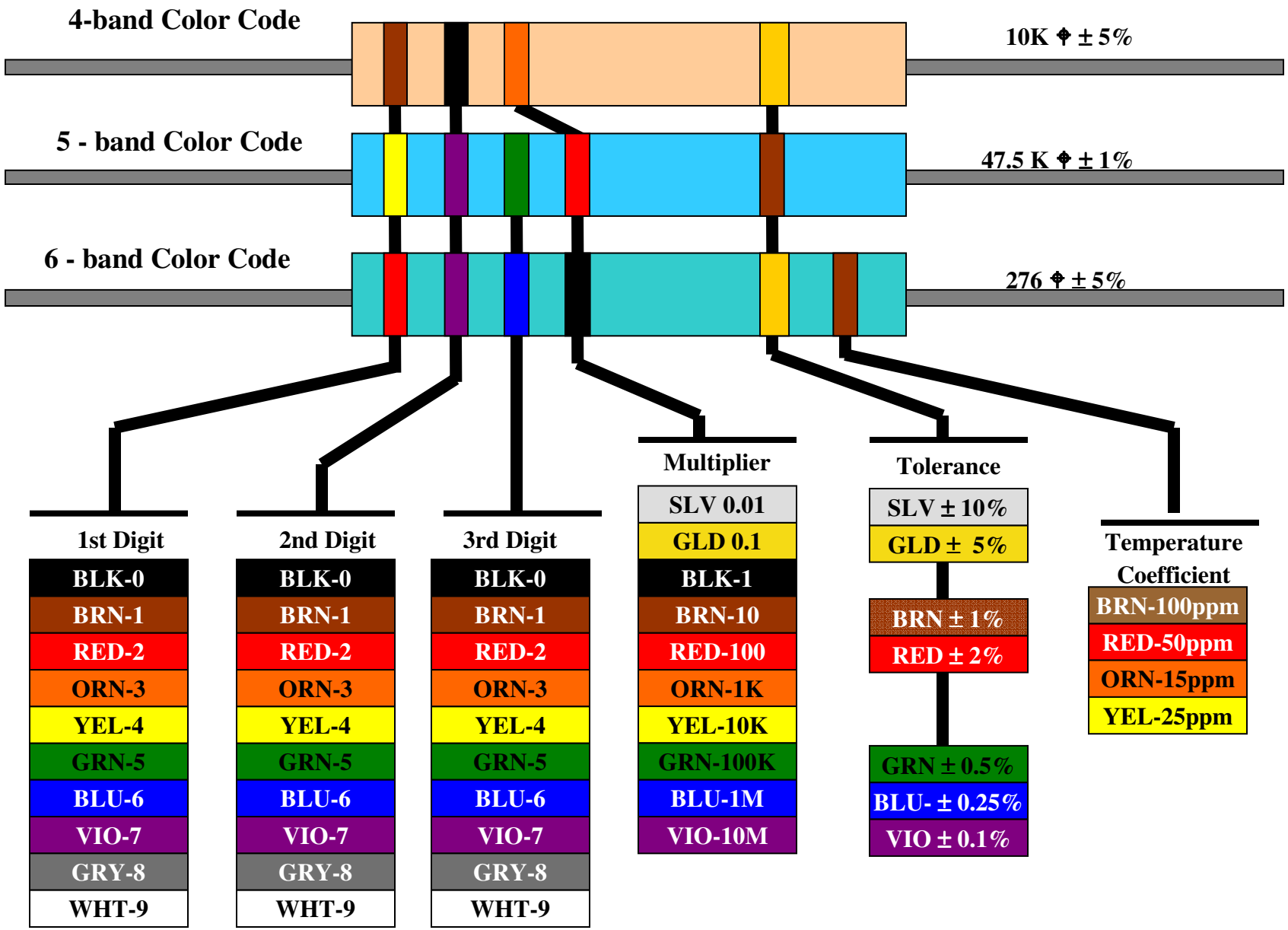Resistor Color Code